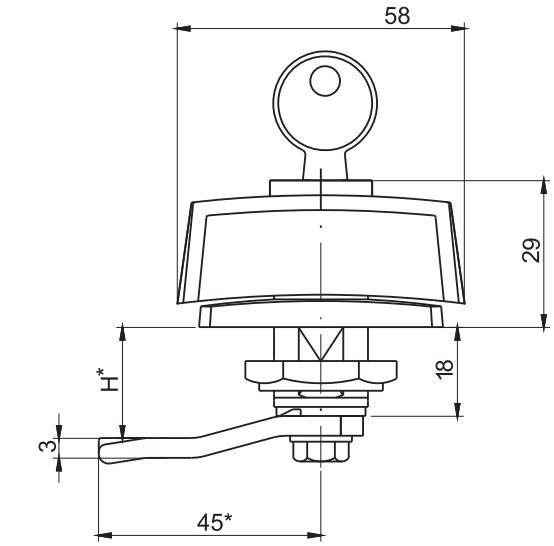

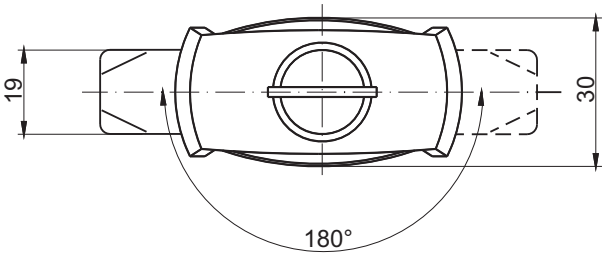

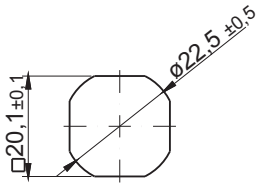

Cut out

TYPE OF LOCK	COMPONENTS	MATERIAL	FINISH [C]	
			RAL 9005	RAL 7035
RW300	Housing, knob	Polyamide	07	08
	Cam	Steel zinc plated	-	-

How to order:

RW300 — H.G — 1333 — C

- Type of lock
- Height cam H (str. 1C-9 - 1C-22)
- Key code
- Finish [C]

* possibility to order in another dimension
H.G - the cam unbending dimension (H-locking height, G-group)
The lock is fitted with cams from the group: 11, 12, 13, 14, 18, 31, 32, 33, 34, 38, JZ-002, JK-1610.01 (page 1C-7 - 1C-20)