Lock 2.521, 2.505

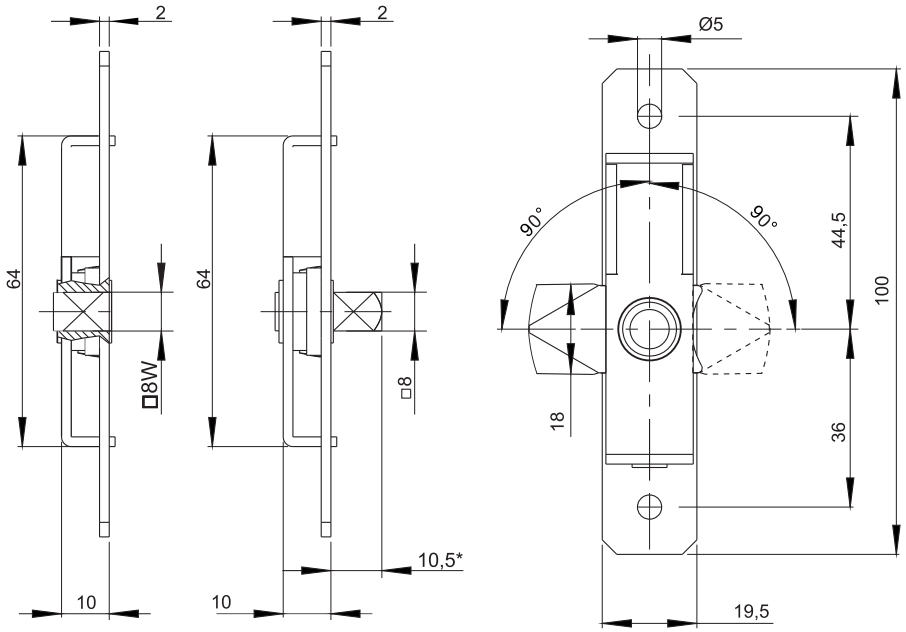

2.521.004 2.521.001

CATALOGUE NUMBER	COMPONENTS	MATERIAL
2.521.001	Housing, Insert, Cam	Steel zinc plated
2.521.004	Housing, Insert, Cam	Stainless steel

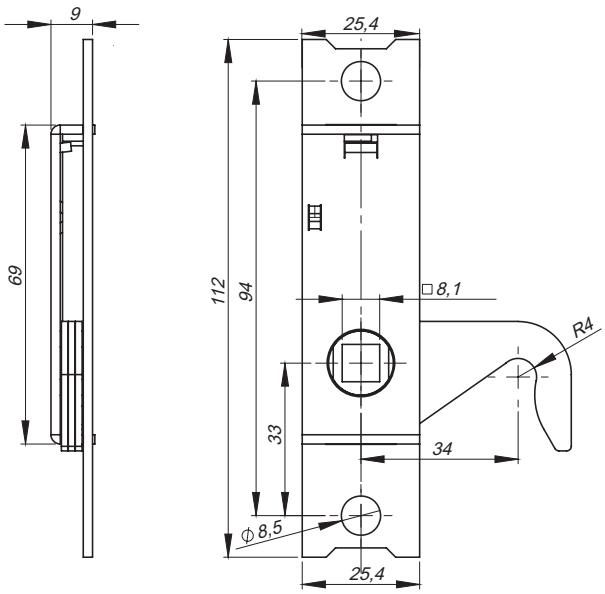

CATALOGUE NUMBER	COMPONENTS	MATERIAL
2.505.001	The base of the cam	Steel zinc plated
	The hook cam	Steel zinc plated
	The spring of the lock	Stainless steel