M22ZD

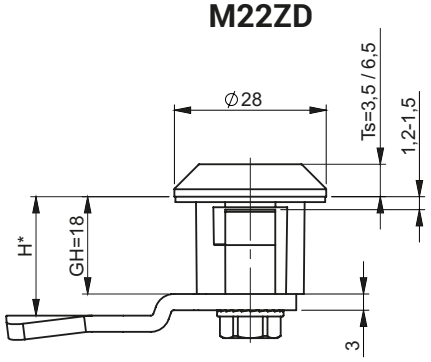

M22ZD22

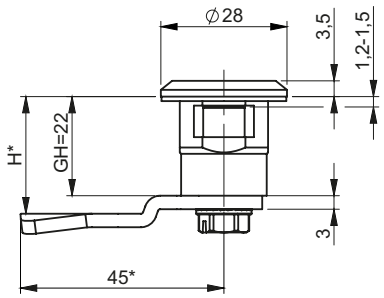

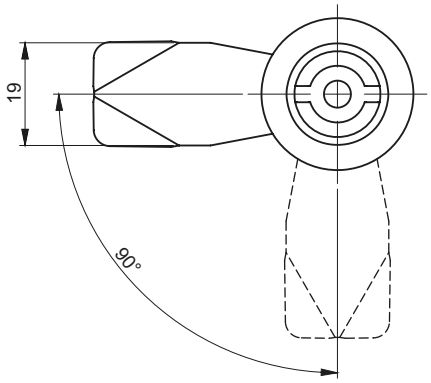

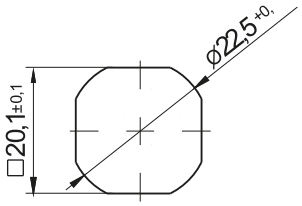

Cut out

Lock with flange 3.5 version only with pins made of polyamide tip: S, D3, D5.
Locks available from the plastic cam

Insert							Insert finish [C]				Housing finish [K]	
							Chrome	Nickel	RAL 9005	RAL 7035	RAL 9005	RAL 7035
D3	D5	T9	KW 8	S	N	C9	01	02	04	05	07	08

NAME	COMPONENTS	MATERIAL
M22ZD M22ZD22	Housing	Poliamide
	Insert	ZAMAK5
	Cam	Steel zinc plated

How to order :

M22ZD 7,5 — T9 — H.G — 90 — C — K

- Type of lock+Ts
- Type of insert
- Height of cam H (page 1C-7 - 1C-20)
- The opening angle of (90°, 180°)
- Insert finish
- Housing finish

* possibility to make in another dimension
H.G - the cam unbending dimension (H-locking height, G-group)
to be chosen from pages 1C-7 to 1C-20

The lock is fitted with cams from the group: 11, 12, 13, 14, 18, 31, 32, 33, 34, 38, JZ-002, JK-1610.01