Hinge 3.ST7, 3.ST7-1, 3.ST7-2

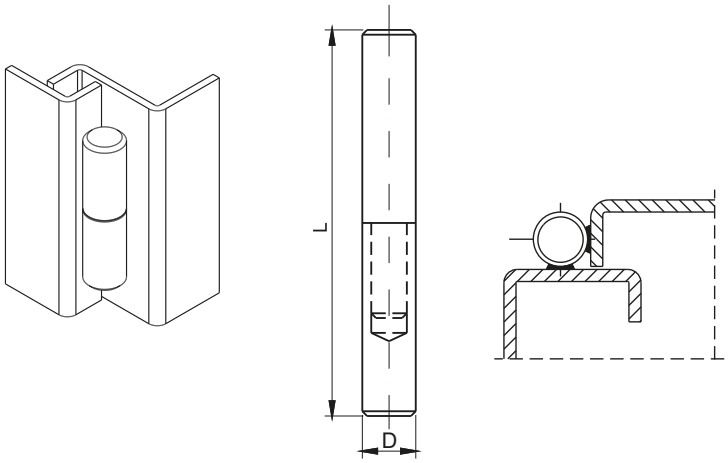

CATALOGUE NUMBER	Dimension		X
	L [mm]	D [mm]	
3.ST7.X 3.ST7.XSN	40	10	001
	50	10	002
	65	10	003
	40	14	005
	100	13	006
	100	16	007

CATALOGUE NUMBER	COMPONENTS	MATERIAL
3.ST7.X	Holder, Pin	Steel
3.ST7.XSN	Holder, Pin	Stainless steel

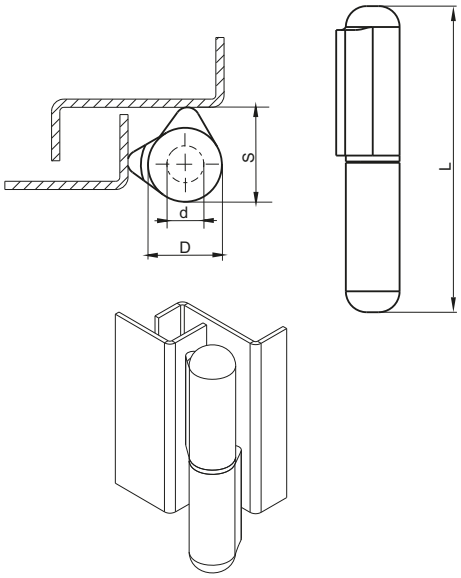

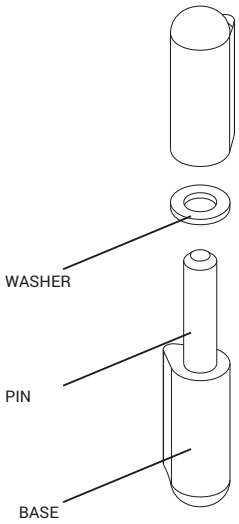

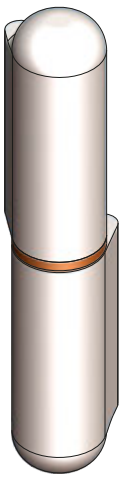

ST 7-1

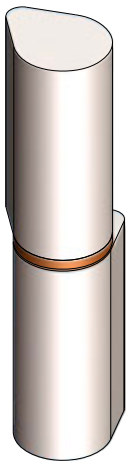

ST 7-2

CATALOGUE NUMBER	COMPONENTS	MATERIAL
3.ST7-1	Base, Pin	Steel
3.ST7-2	Washer	Brass

Cat. No. ST7-1	Cat. No. ST7-2	Dimensions	D	S	d	L
ST7-1.001A	ST7-2.001A	8x9,5	8	9,5	5	40
ST7-1.001B	ST7-2.001B	8x9,5	8	9,5	5	50
ST7-1.002A	ST7-2.002A	10x12	10	12	6	60
ST7-1.002B	ST7-2.002B	10x12	10	12	6	70
ST7-1.003	ST7-2.003	13x16	13	16	8	80
ST7-1.004	ST7-2.004	16x20	16	20	10	100
ST7-1.005	ST7-2.005	18x22	18	22	12	135
ST7-1.006	ST7-2.006	20x25	20	25	14	150
ST7-1.007	ST7-2.007	23x28	23	28,5	16	200