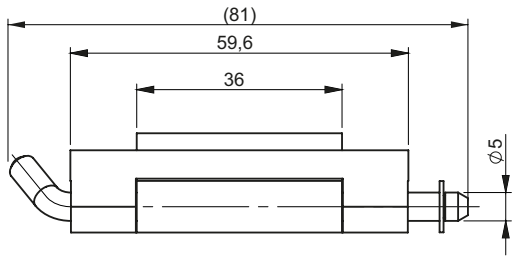

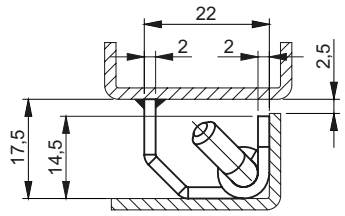

CATALOGUE NUMBER	COMPONENTS	MATERIAL
3.ST43.001	Holder	Steel
	Pin, Base	Steel zinc plated
3.ST43.001SN	Holder, Base, Pin	Stainless steel

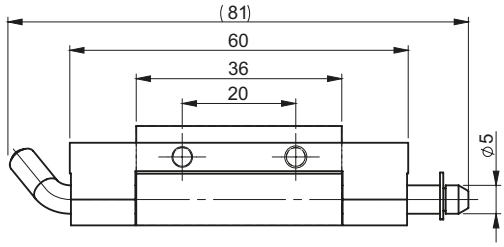

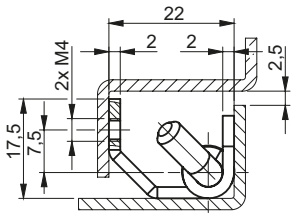

CATALOGUE NUMBER	COMPONENTS	MATERIAL
3.ST43.002	Holder	Steel
	Pin, Base	Steel zinc plated
3.ST43.002SN	Holder, Base, Pin	Stainless steel

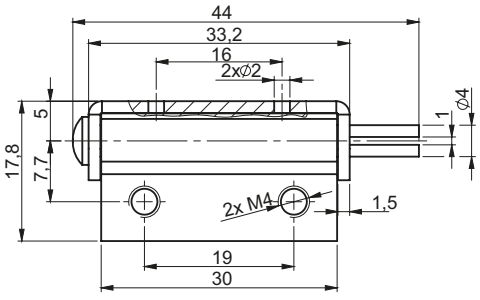

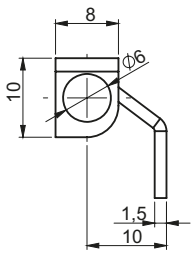

CATALOGUE NUMBER	COMPONENTS	MATERIAL
3.ST43-2.001	Holder, Base, Pin	Steel zinc plated
3.ST43-2.001SN	Holder, Base, Pin	Stainless steel